Mazak

# VC-Ez 410 IP
# VC-Ez 510 IP

[ Vertical Machining Center ]

# VC-Ez 410 IP
# VC-Ez 510 IP

Compact vertical machining center with BT No.40

High-speed, high-accuracy machine performance for high productivity


## VC-Ez 410 IP

Shown with optional equipment


## VC-Ez 510 IP

Shown with optional equipment

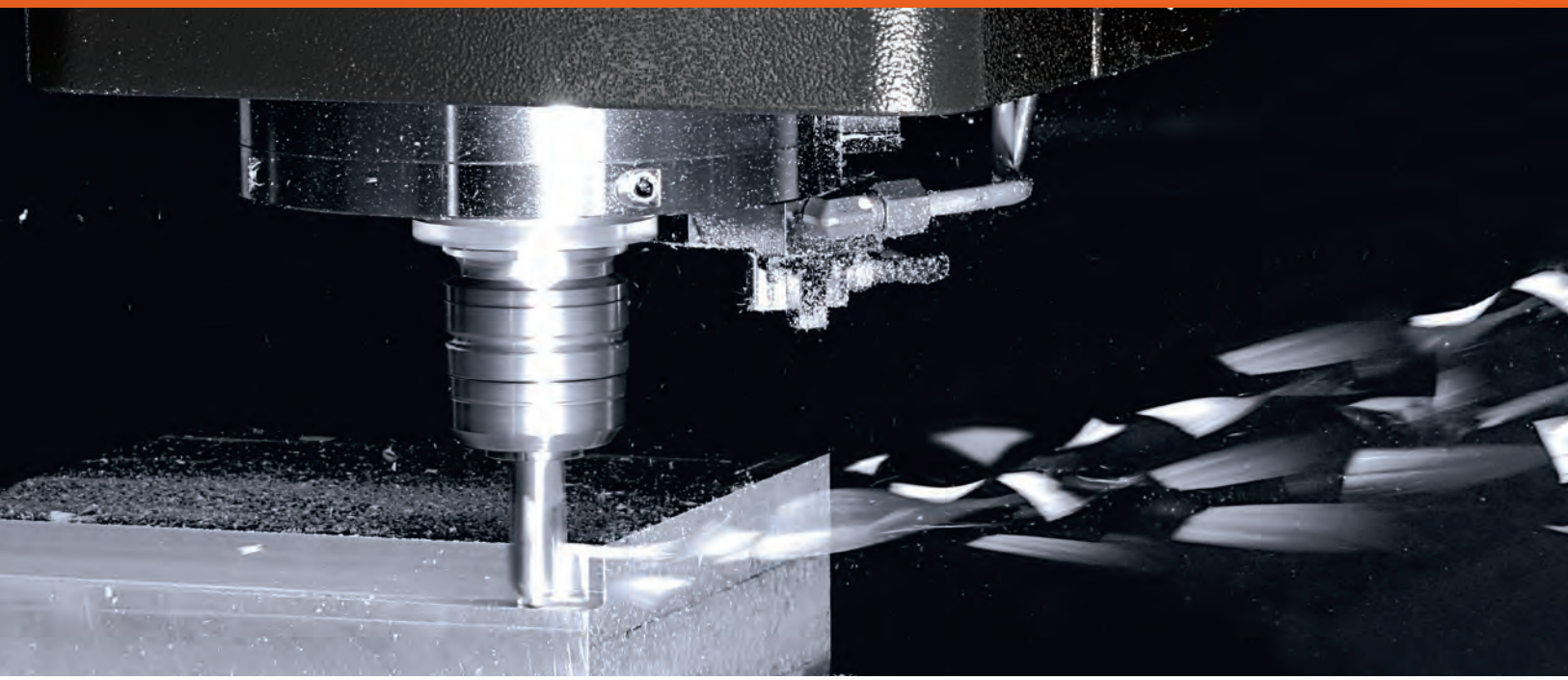

- 18.5 kW, 12000 $min^{-1}$ (rpm) high-performance standard spindle for machining any material
- Linear roller guides provide stable machining over extended periods of operation
- The THERMAL SHIELD ensures stable continuous machining accuracy
- 24 tool magazine allows easy tool setup for multiple types of workpieces
- Extensive coolant and chip disposal options
- Equipped with the latest CNC system MAZATROL SmoothEz for easy programming and setup

MAZATROL SMOOTHEZ


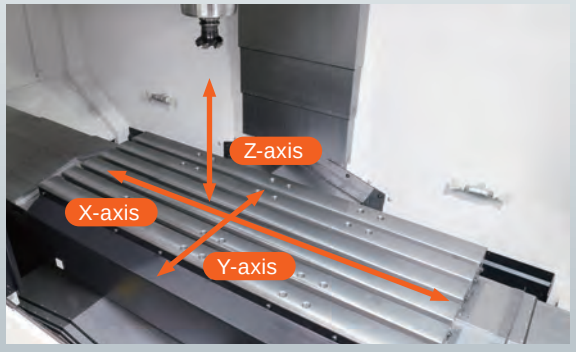


Wide machining area with Table and axis stroke

# Main Feature

## Largest table and machining area for this class of vertical machining center

The large table and axes strokes allow the loading of large fixtures and workpieces.

### VC-Ez 410 IP

Table size

**950 mm × 410 mm**

Max. workpiece dimension

**950 mm (Length)**

**410 mm (Width)**

**450 mm (Height)**

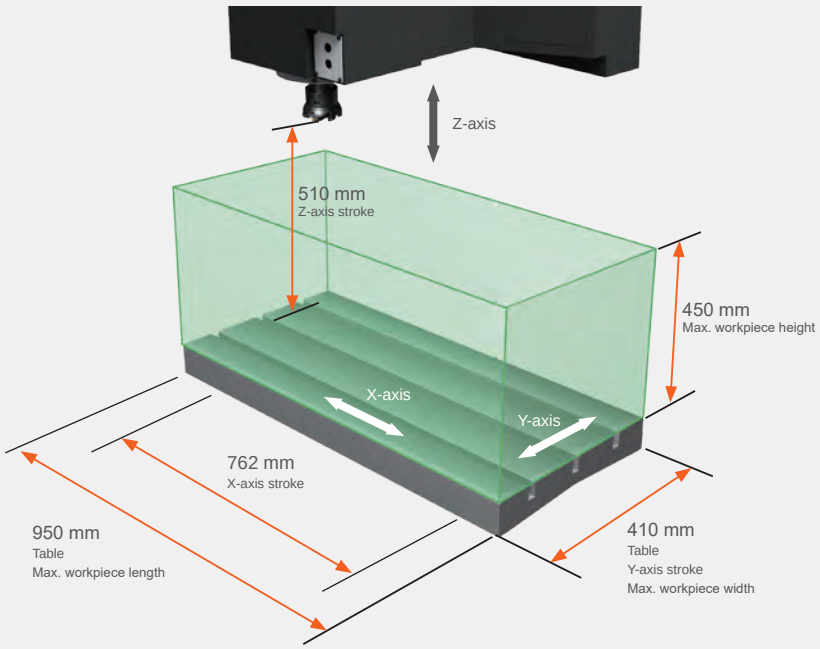


### VC-Ez 510 IP

Table size

**1250 mm × 492 mm**

Max. workpiece dimension

**1250 mm (Length)**

**492 mm (Width)**

**570 mm (Height)**

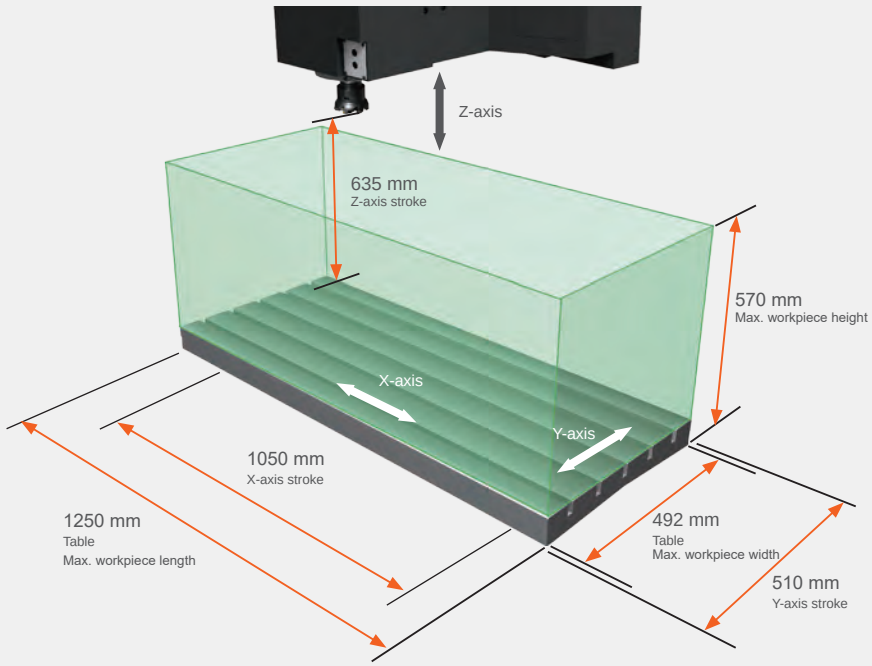


*Please refer to p.11 for detailed table shapes and dimensions.

## Tool magazine

The standard tool magazine has a storage capacity of 24 tools, and available to minimize complicated tool setup for wide range of workpieces.

| | |
|---|---|
| Tool shank | BT 40 |
| Max. tool length (from gauge line) | 350 mm |
| Max. tool diameter (with adjacent tools) | Φ80 mm |
| Max. tool diameter (with adjacent pockets empty) | Φ150 mm |
| Max. tool weight | 8 kg |
| Tool capacity | 24 |

## High-speed automatic tool changer

The cam driven double arm system is designed for reliability and high-speed tool changes.

Tool change time
(chip-to-chip)

**3.8 sec.**

(Tool-to-tool)

**2.2 sec.**

## Extensive machining applications

Material : Aluminum
Workpiece name : Automotive component motor case

Material : Aluminum
Workpiece name : Medical component

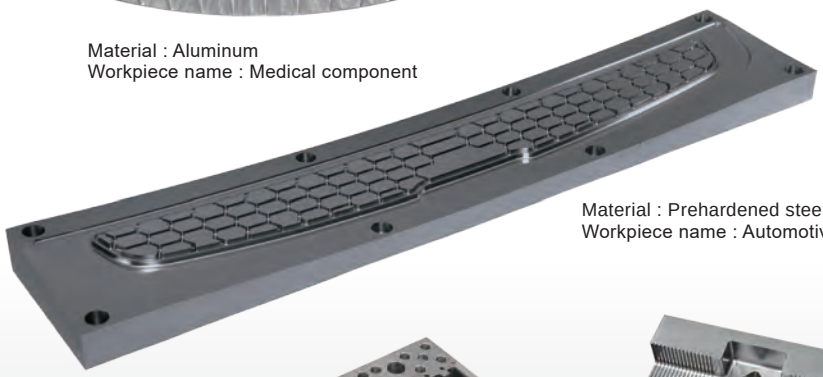

Material : Prehardened steel
Workpiece name : Automotive component die

Material : Carbon steel
Workpiece name :
General industry machinery component

Material : Stainless steel
Workpiece name :
Metal processing machinery component

Material : Cast iron
Workpiece name :
Construction machinery component

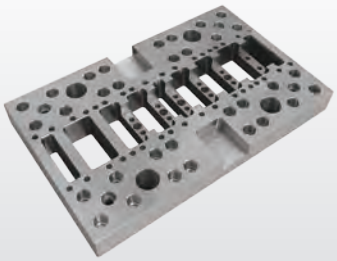

Material : Carbon steel
Workpiece name :
General industry machinery component

Material : Prehardened steel
Workpiece name : General industry machinery component die

# High Productivity

## Powerful, high torque spindle for higher productivity

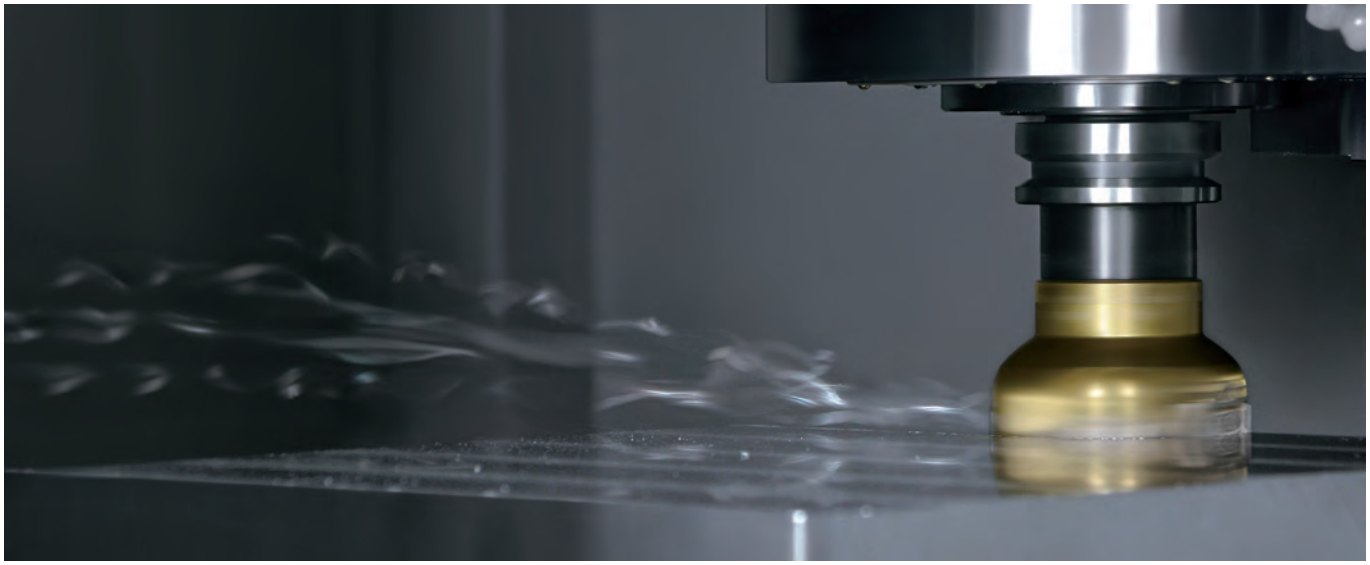

## Spindle output : **18.5 kW / 7.5 kW** (5 min. rating / cont.rating)

### BT No.40, 12000 min$^{-1}$ (rpm) spindle

The 12000 min$^{-1}$ (rpm) spindle can perform heavy duty machining of steel as well as high speed machining of aluminum with small diameter tools for reduced cutting time. High accuracy machining can be performed with minimum heat generation by the spindle with ceramic ball spindle bearings.

## Machining capacity (test results)

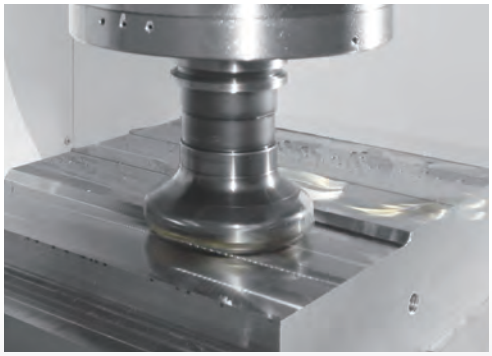

Speed : 1094 min$^{-1}$ (rpm)
Feedrate : 1313 mm / min
Depth of cut : 6.0 mm
Material : Carbon Steel - C45

Material removal rate : **425** **cm$^3$ / min**

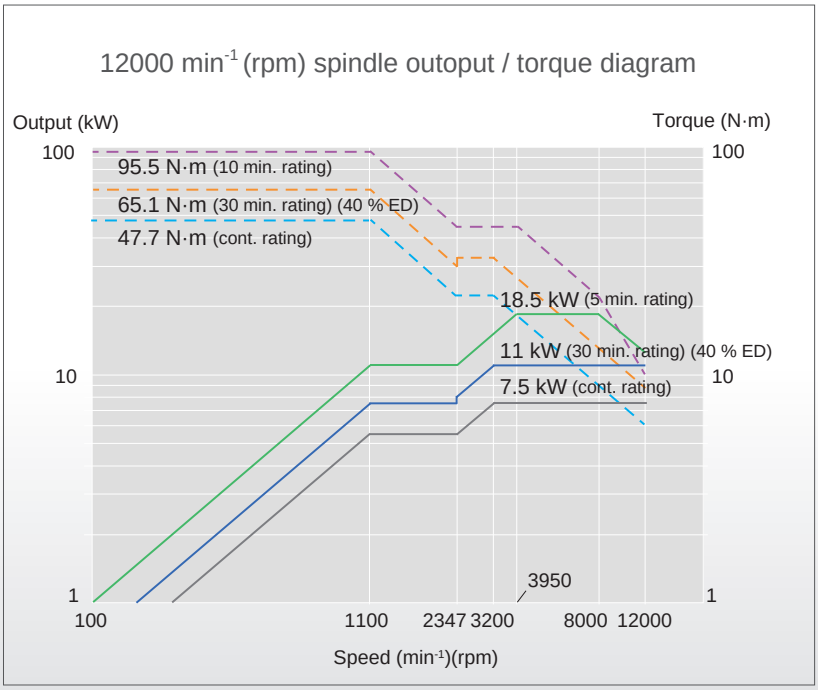

## Flood coolant

Coolant is discharged from nozzles on the spindle housing.

## Coolant through spindle system OPTION

Coolant is fed to the tool tip by passages through the tool holder and tool. Pump pressure specification is 1.5 MPa (15 kgf/cm$^2$). Very effective for drilling such as through coolant drill and indexable insert drill operation.

* It is included in optional package 4,5

## Cabinet Cooler

By keeping the temperature inside the box at an appropriate level, extends the life of electronic parts and control equipment, and reduces the effects of the temperature inside the factory and any troubles caused by the heat generated by the equipment.
Minimize downtime due to failures and increase availability.

## Equipment for high accuracy machining

### Linear roller guides utilized on the X-, Y- and Z-axes

The rigid linear roller guides utilized on all linear axes provide improved positioning accuracy compared to slideways. Stable machining accuracy is ensured over extend periods of time.

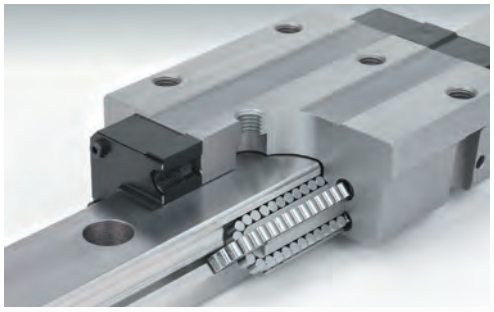

### Ball screw core cooling OPTION

Temperature controlled cooling oil circulates through the ball screw cores to ensure stable machining accuracy over extended periods of high speed operation.

* It is included in optional package 1,3,5

# Ease of Operation

## Ergonomic design for convenient operation

### Large door opening

Thanks to its large door opening, workpieces can easily be loaded / unloaded by using an overhead crane.

### Ease of tool loading / unloading

Tool clamp / unclamp switches are located on the headstock for convenient loading / unloading of tools to / from the spindle.

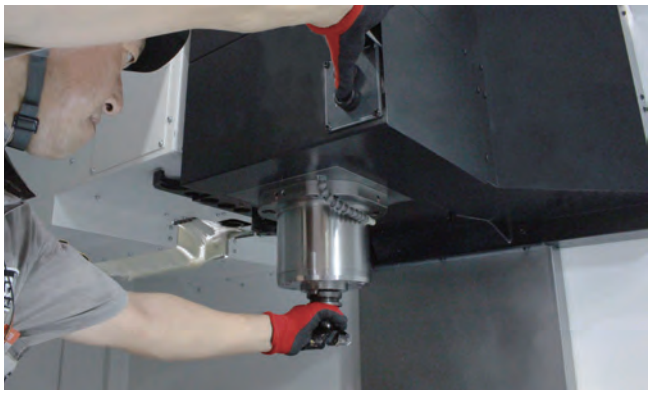

### Maintenance area

Items requiring frequent access for machine maintenance are arranged centrally on the side of the control cabinet.

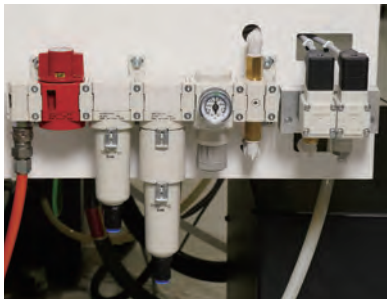

### Spiral conveyor (horizontal left) OPTION

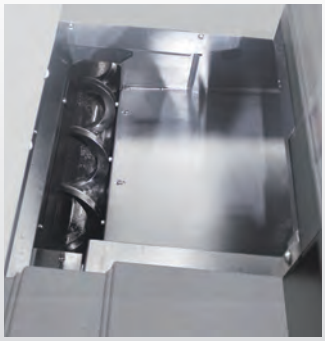

The spiral conveyor at the bottom of the table reliably discharges the cutting chips to the outside of the machine.

* It is included in optional package 2,3,4,5

### Cover Coolant

Cutting chips deposited on the sliding surface cover is washed away with a coolant of 70 L per minute and dropped onto the spiral conveyor at the bottom of the table.

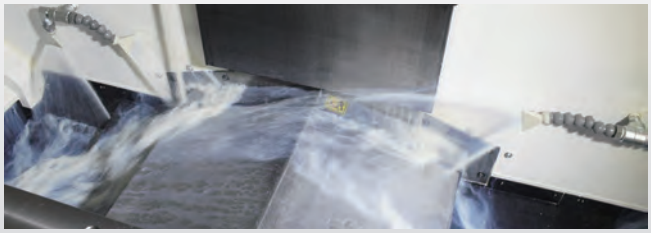

# Flexibly changeable screen display

MAZATROL SMOOTHEz


## Ez Operation　Ease of operation

- Equipped with "Quick Mazatrol" for enhanced Mazatrol programming
- Intuitive operation with 15" touch screen
- Ease of use has been enhanced with screen design and simple l ayout customization

## Ez Machining　High-speed, high-accuracy machining

- Heat Displacement Control equipped with Thermal Shield
- Smooth Machining Configuration can adjust machining features for various machining requirements

## Ez Setup　Digital Setup

Data on a machine in the factory can be accessed from a PC in the office by optional Smooth CAM Ai software. Digital setup ensures higher operational efficiency.

## QUICK MAZATROL

Programs can be easily created and checked by displaying the 3D model of the workpiece. Can reduce input errors and time for program checking.

Easily edit a program by touching the display

## Heat Displacement Control THERMAL SHIELD

The THERMAL SHIELD is an automatic compensation system for room temperature changes, which realizes enhanced continuous machining accuracy. Mazak has performed extensive testing in a variety of environments in a temperature-controlled room and has used the results to develop a control system that automatically compensates for temperature changes in the machining area.

## Custom display

Displayed data position on the CNC screen can be changed to the optimum position for any operator's height for ease of operation. Data can be checked and set with minimu screen transition by customizing the display according to operation process.

## Standard Machine Specifications

| | | VC-Ez 410 IP | VC-Ez 510 IP |
|---|---|---|---|
| Stroke | X-axis stroke (table right / left) | 762 mm | 1050 mm |
| | Y-axis stroke (table back / forth) | 410 mm | 510 mm |
| | Z-axis stroke (spindle up / down) | 510 mm | 635 mm |
| | Distance from table top to spindle nose | Min. 100 mm / Max. 610 mm | Min. 100 mm / Max. 735 mm |
| | Distance from column surface to spindle center | 517 mm | |
| Table | Table size | 950 mm × 410 mm | 1250 mm × 492 mm |
| | Max. load capacity (evenly distributed | 700 kg | 1000 kg |
| | Table surface configuration | 18 mm T slot × 3 , 125 mm pitch | 18 mm T slot × 5 , 80 mm pitch |
| Spindle | Max. spindle speed | 12000 $min^{-1}$ (rpm) | |
| | Spindle speed range | 2-steps (electric) | |
| | Spindle taper | 7/24 taper No.40 | |
| Feedrate | Rapid traverse rate (X-, Y-, Z-axis) | 1 ~ 42000 mm/min, 1 ~ 42000 mm/min, 1 ~ 30000 mm/min | 1 ~ 42000 mm/min, 1 ~ 42000 mm/min, 1 ~ 42000 mm/min |
| | Cutting feedrate (X-, Y-, Z-axis) | 1 ~ 8000 mm/min | |
| | Shape compensation (X-, Y-, Z-axis) | 1 ~ 42000 mm/min, 1 ~ 42000 mm/min, 1 ~ 30000 mm/min | 1 ~ 42000 mm/min, 1 ~ 42000 mm/min, 1 ~ 42000 mm/min |
| Automatic tool changer | Tool shank | Tool shank MAS BT40 | |
| | Tool storage capacity | 24 | |
| | Max. tool diameter / length (from gauge line) / weight | Φ80 mm / 350 mm / 8 kg | |
| | Max. tool diameter with adjacent tool pockets empty | Φ150 mm | |
| | Tool selection method | MAZATROL random memory (random pocket assignment) | |
| | Tool change time (tool-to-tool) | 2.2 sec. | |
| Motor | Spindle motor (10% ED / cont.rating) | 18.5 kW (25 HP) / 7.5 kW (10 HP) | |
| Power requirement | Electrical power requirement (10% ED / cont.rating) | 23.0 kVA / 15.1 kVA | 24.5 kVA / 16.6 kVA |
| | Air supply (pressure / flow rate ) | 0.5 MPa ～ 1.0 MPa (5 $kgf/cm^2$ ～ 10 $kgf/cm^2$) / 100 L/min (ANR) | |
| Coolant | Coolant tank capacity | 300 L | |
| Machine size | Machine height | 2898 mm | 3024 mm |
| | Machine width | 2425 mm | 3040 mm |
| | Machine length | 2594 mm | 2739 mm |
| | Machine weight (without coolant tank) | 4800 kg | 5500 kg |

## Machine Dimensions

Unit : mm

### VC-Ez 410 IP

Cabinet cooler specification

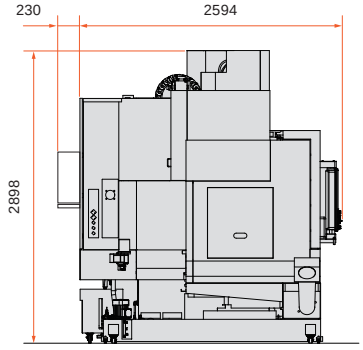


Spiral conveyor specification

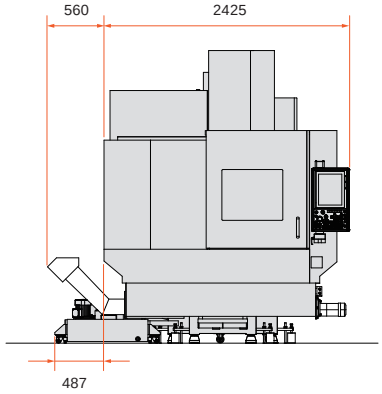


### VC-Ez 510 IP

Cabinet cooler specification

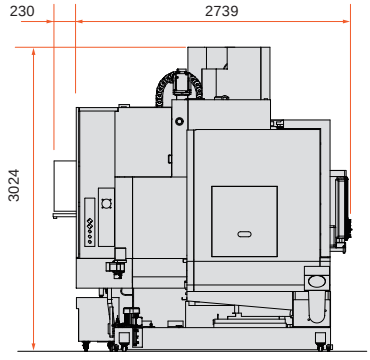


Spiral conveyor specification

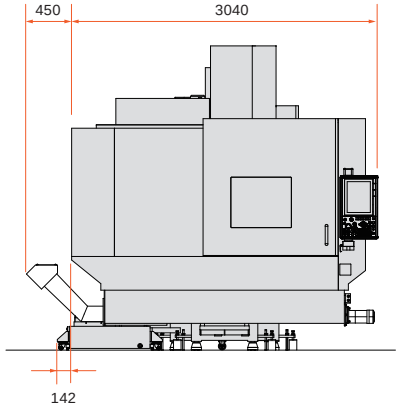


Please contact us for detailed dimensions.

## Table Dimensions

### VC-Ez 410 IP

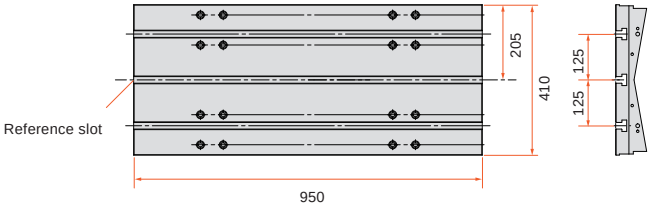


### VC-Ez 510 IP

Unit : mm

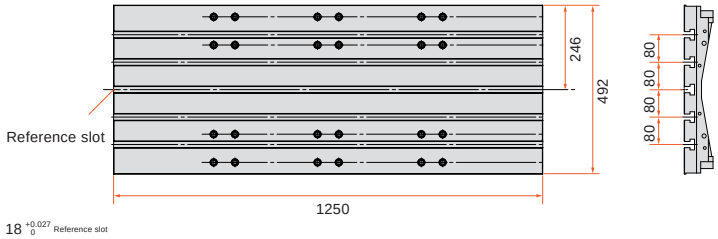


T-slot details
(VC-Ez 410 IP / 510 IP)

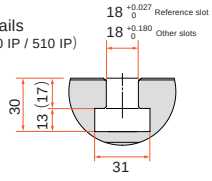

## Optional package

○ : Option - : NA

| | | Pack 1 | Pack 2 | Pack 3 | Pack 4 | Pack 5 |
|---|---|---|---|---|---|---|
| High accuracy | Ball Screw core cooling X, Y & Z | ○ | – | ○ | – | ○ |
| Chip disposal | Spiral Conveyor Left Disposal With Chip Bucket | – | ○ | ○ | ○ | ○ |
| Coolant | Coolant through spindle - 15 bar + Flow Switch | – | – | – | ○ | ○ |

## Standard and Optional Equipment

● : Standard ○ : Option

| | | VC-Ez 410 IP, VC-Ez 510 IP |
|---|---|---|
| Machine | Main Spindle Motor AC 18.5kW (25HP) | ● |
| | Spindle Speed 12000 $min^{-1}$ (rpm) (#40) | ● |
| | 24 Tool Magazine | ● |
| | Full Cover with Chip and Coolant Guard | ● |
| | Absolute Positioning System | ● |
| | Operator Door Interlock | ● |
| | One Set Of Manuals (CD) | ● |
| | Foundation Kit (Dry-Pit And Plates) | ● |
| | Mazak Std Color (F White(Fine) / S Black) | ● |
| High accuracy | Roller Guides | ● |
| | Ball Screw core cooling X, Y & Z | ○*1 |
| Chip disposal | Chip pan (Front Side Disposal) | ● |
| | Spiral Conveyor Left Disposal With Chip Bucket | ○*2 |
| | 300L Coolant Tank | ● |
| | Flood Coolant 0.45Mpa | ● |
| | Cover Coolant | ● |
| | Coolant Gun | ● |
| Coolant | Standard Coolant System | ● |
| | Coolant through spindle - 15 bar + Flow Switch | ○*3 |
| Peripheral equipment | Work Light | ● |
| | Auto Power Off (Breaker Trip) | ● |
| | Signal Tower | ● |
| | Cabinet Cooler | ● |
| Purchase peripheral equipment | Pull Stud | ● |
| CNC option | Smooth Synchronized Tapping | ● |
| | Tap Retract Function | ● |
| | MT Connect Adapter | ● |

*1 It is included in optional package 1,3,5
*2 It is included in optional package 2,3,4,5
*3 It is included in optional package 4,5

Please contact us for other equipment or specifications.

## MAZATROL SmoothEz Specifications

| | MAZATROL | EIA |
|---|---|---|
| Number of controlled axes | Simultaneous 2 ~ 4 axes | |
| Least input increment | 0.0001 mm, 0.00001 inch, 0.0001 deg | |
| High speed, high precision control | Shape compensation, Smooth corner control, Rapid traverse overlap, Rotary axis shape compensation | Shape compensation, Smooth corner control, Rapid traverse overlap, Rotary axis shape compensation, High-speed machining mode, High-speed smoothing control |
| Interpolation | Positioning (interpolation), Positioning (non-interpolation), Linear interpolation, Circular interpolation, Synchronous tapping | Positioning (interpolation), Positioning (non-interpolation), Linear interpolation, Circular interpolation, Spiral interpolation, Helical interpolation, Cylindrical interpolation*, Involute interpolation*, NURBS interpolation *, Polar coordinate interpolation* , Synchronous tapping |
| Feedrate | Rapid traverse, Cutting feed, Cutting feed (per minute), Cutting feed (per revolution), Dwell (time / rotation), Rapid traverse override, Cutting feed override, G0 speed variable control, Feedrate limitation, Variable acceleration control, G0 slope constant* | Rapid traverse, Cutting feed, Cutting feed (per minute), Cutting feed (per revolution), Inverse time feed, Dwell (time / rotation), Rapid traverse override, Cutting feed override, G0 speed variable control, Feedrate limitation, Time constant changing for G1, Variable acceleration control, G0 slope constant* |
| Program registration | Number of programs : 256 (Standard) / 960 (Max.), Program memory : 2 MB, Program memory expansion : 8 MB*, Program memory expansion : 32 MB* | |
| Control display | Display : 15" touch panel, Resolution : XGA | |
| Spindle functions | S code output, Spindle speed limitation, Spindle speed override, Spindle speed reaching detection, Multiple position orient, Constant surface speed, Spindle speed command with decimal digits, Synchronized spindle control, Spindle speed range setting | |
| Tool functions | Number of tool offset : 4000, T code output for tool number, Tool life monitoring (time), Tool life monitoring (number of machined workpieces) | Number of tool offset : 4000, T code output for tool number, T code output for group number, Tool life monitoring (time), Tool life monitoring (number of machined workpieces) |
| Miscellaneous functions | M code output, Simultaneous output of multiple M codes | |
| Tool offset functions | Tool position offset, Tool length offset, Tool diameter / tool nose R offset, Tool wear offset | |
| Coordinate system | Machine coordinate system, Work coordinate system, Local coordinate system, Additional work coordinates (300 set) | |
| Machine functions | – | Shaping function, Dynamic compensation Ⅱ |
| Machine compensation | Backlash compensation, Thermal shield | |
| Protection functions | Emergency stop, Interlock, Pre-move stroke check | |
| Automatic operation mode | Memory operation | Memory operation, Tape operation, MDI operation, SD card operation, EtherNet operation* |
| Automatic operation control | Optional stop, Dry run, Manual handle interruption, MDI interruption, TPS, Restart, Machine lock | Optional block skip, Optional stop, Dry run, Manual handle interruption, MDI interruption, TPS, Restart, Restart2, Collation stop, Machine lock |
| Manual measuring functions | Tool length teach, Touch sensor coordinates measurement, Workpiece offset measurement, WPC coordinate measurement, Measurement on machine | Tool length teach, Tool offset teach, Touch sensor coordinates measurement, Workpiece offset measurement, Measurement on machine |
| Automatic measuring functions | WPC coordinate measurement, Automatic tool length measurement, Sensor calibration, Tool breakage detection, External tool breakage detection* | Automatic tool length measurement, Sensor calibration, Tool breakage detection, External tool breakage detection* |
| Interface | PROFIBUS-DP*1, EtherNet/IP*1, CC-Link*1 | |
| Card interface | SD card interface, USB | |
| EtherNet | 10 M / 100 M / 1 Gbps | |

* Option
*1 Only one of these options is available.

# Manufacturing & Support

Mazak India with National Head Office at Pune has expanded its network all over India to provide customers with prompt before and after-sales services and support on a local basis.

The Pune Technology Center introduces technology solutions to customers through the latest machine demonstrations, the latest application display, component machining advice, operation training and many other services.


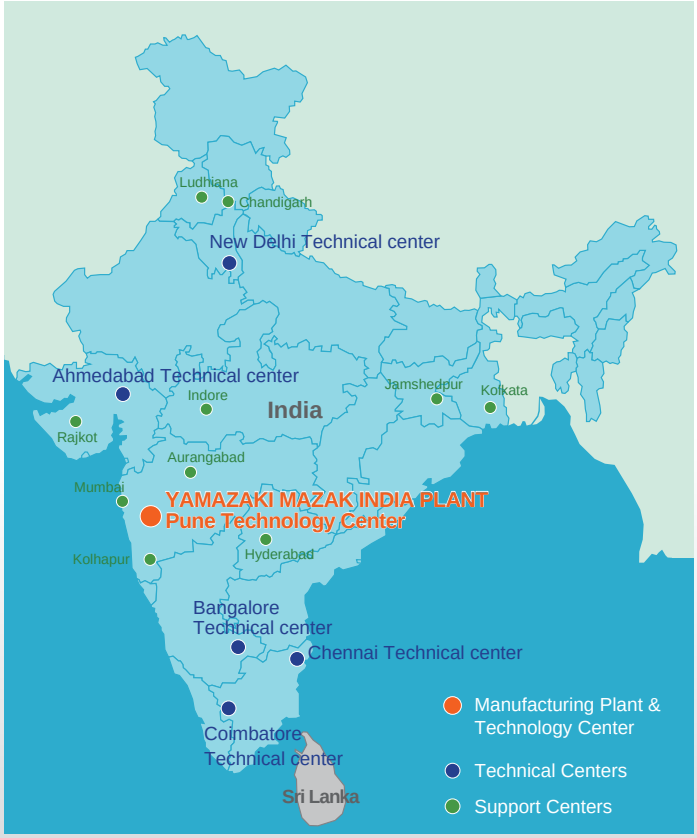


## Show room

The Pune Technology Center proposes technology solutions to customers through services such as cutting-edge machining demonstrations, application exhibitions, machining and processing advice, and operation training.

## Training Center

In order to make the most of the performance of the vertical machining center, we have prepared a training program to develop processing engineers.

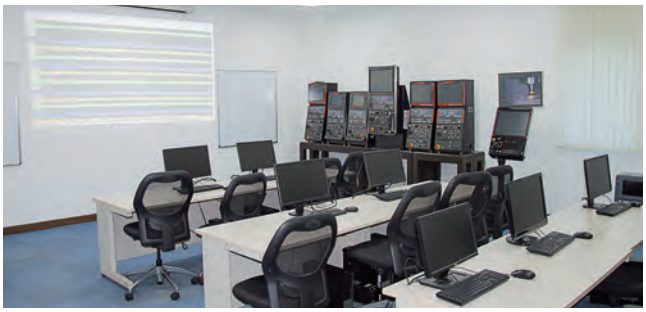

## Parts Support

At the parts center, we respond quickly to orders from customers in India, from order receipt to shipment, 24 hours a day, 365 days a year.
This minimizes mechanical downtime.

## Online Support

In order to use Mazak products with peace of mind, as one of the after-sales services after the introduction of a machine, we provide mechanical troubleshooting, parts arrangement, programming and machine operation with highly-skilled service staff online.


## Spindle Repair

Mazak has established a dedicated spindle repair department to repair troubled spindles. We provide performance and quality equivalent to new products after going through the same assembly, adjustment, balancing, and test run process as new products.

VC-EZ 410 IP
VC-EZ 510 IP

Mazak


**YAMAZAKI MAZAK INDIA**

115, Pune-Nagar Road,
Sanaswadi, Pune 412208

www.mazakindia.in


- Specifications are subject to change without notice.
- This product is subject to all applicable export control laws and regulations.
- The accuracy data and other data presented in this catalogue were obtained under specific conditions. They may not be duplicated under different conditions. (room temperature, workpiece materials, tool material, cutting conditions, etc.)
- 